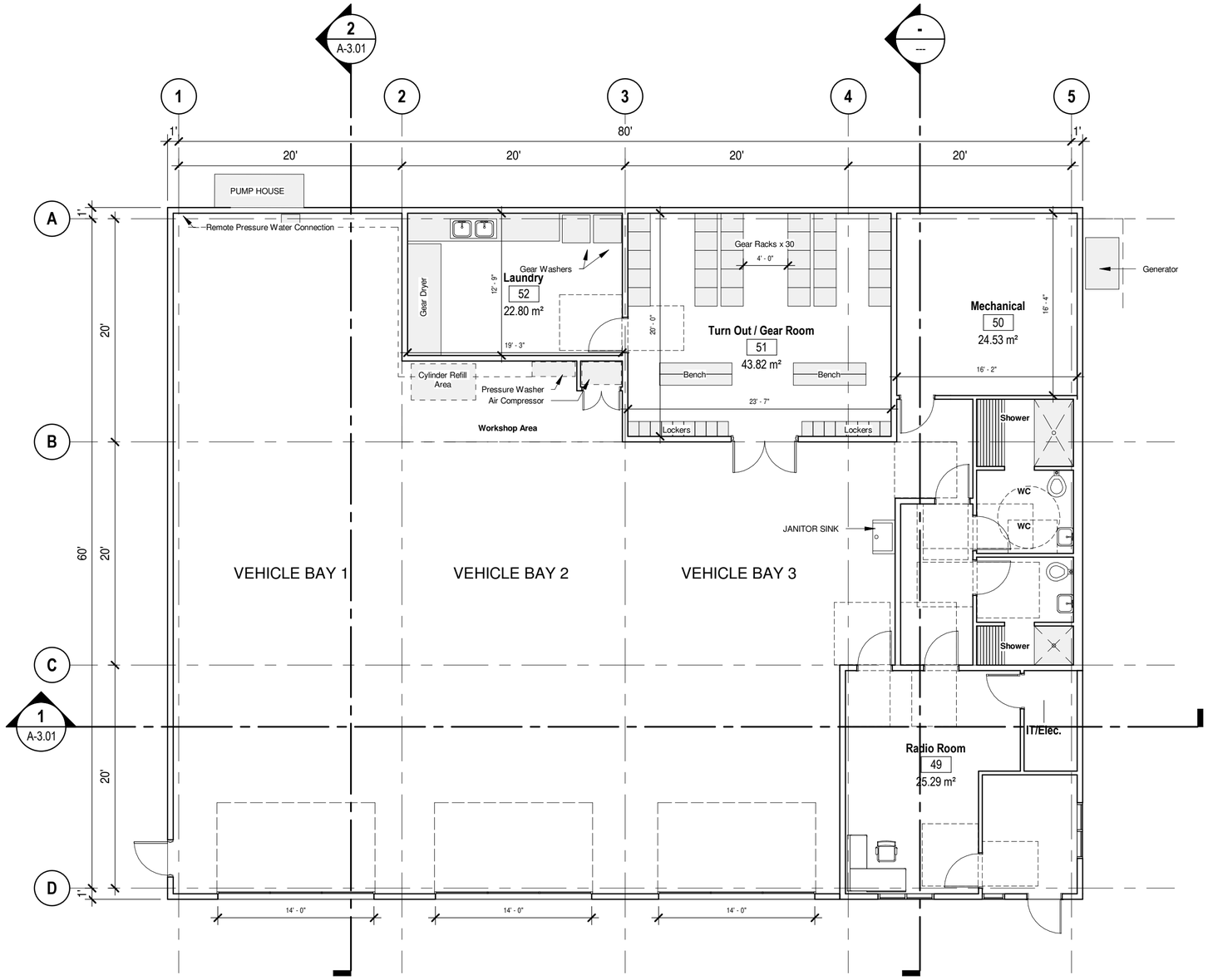

2 A-2.01 LEVEL 1 20' BAYS
SCALE: 1/8" = 1'-0"

kasian

Kasian Architecture
Interior Design
and Planning Ltd

1500 West Georgia Street, Suite 1685
Vancouver, BC Canada V6G 2Z6
T 604 683 4145 F 604 683 2827
www.kasian.com

REV.	YY-MM-DD	REVISION / DRAWING ISSUE	REVIEW

CONSULTANT

PERMIT STAMP

SEAL

THIS DRAWING, AS AN INSTRUMENT OF SERVICE, IS THE PROPERTY OF KASIAN ARCHITECTURE INTERIOR DESIGN AND PLANNING LTD. THE COPYRIGHT IN THE SAME BEING RESERVED TO THEM. NO REPRODUCTION IS ALLOWED WITHOUT THE PERMISSION OF KASIAN ARCHITECTURE INTERIOR DESIGN AND PLANNING LTD AND WHEN MADE MUST BEAR ITS NAME.
THIS DRAWING IS NOT TO BE SCALED. THE CONTRACTOR IS TO VERIFY DIMENSIONS AND DATA NOTED HEREIN WITH THE CONDITIONS ON SITE AND IS RESPONSIBLE FOR REPORTING ANY DISCREPANCY TO KASIAN ARCHITECTURE INTERIOR DESIGN AND PLANNING LTD FOR ADJUSTMENT.

PROJECT

Red Bluff Fire Hall

611 Fir Street, Quesnel, B.C

DRAWING TITLE

FLOOR PLAN - LEVEL 1

DRAWING ISSUE

PROJECT NO.	PLOT DATE	DRAWN
270161	2025/06/06	Author
	SCALE 1/8" = 1'-0"	REVIEWED Checker

DRAWING NO. A-1.01

REVISION

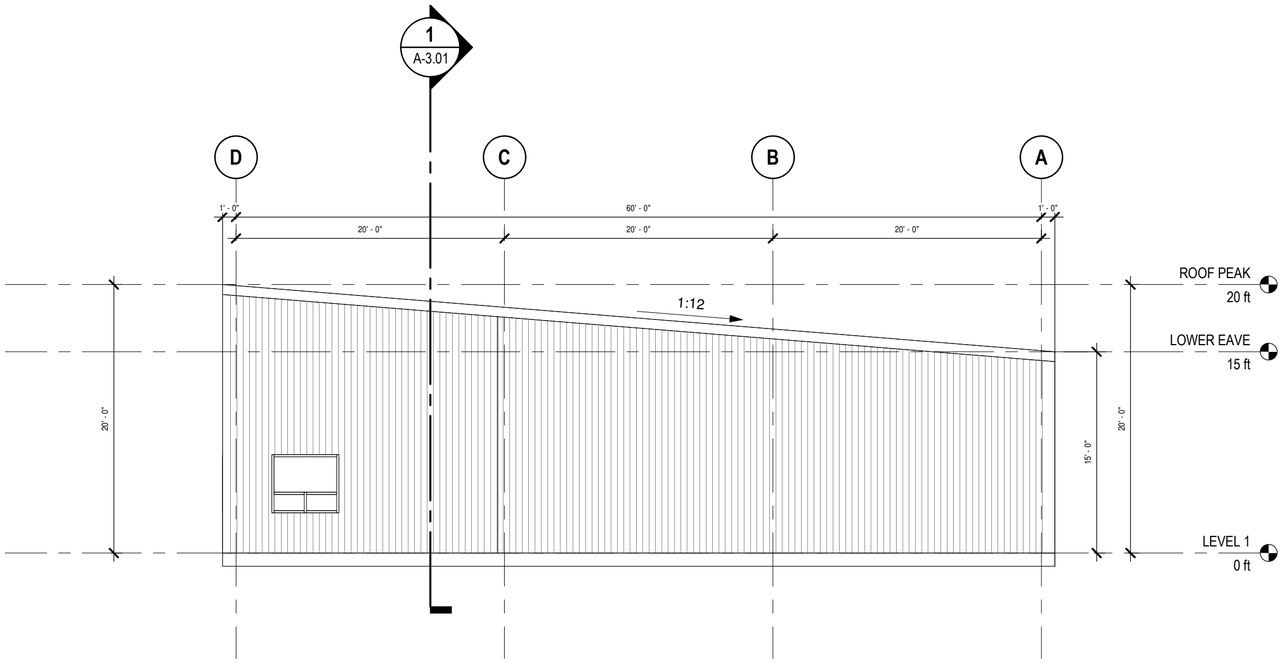

1 SK-1.00 Elevation_EAST
SCALE: 1/8" = 1'-0"

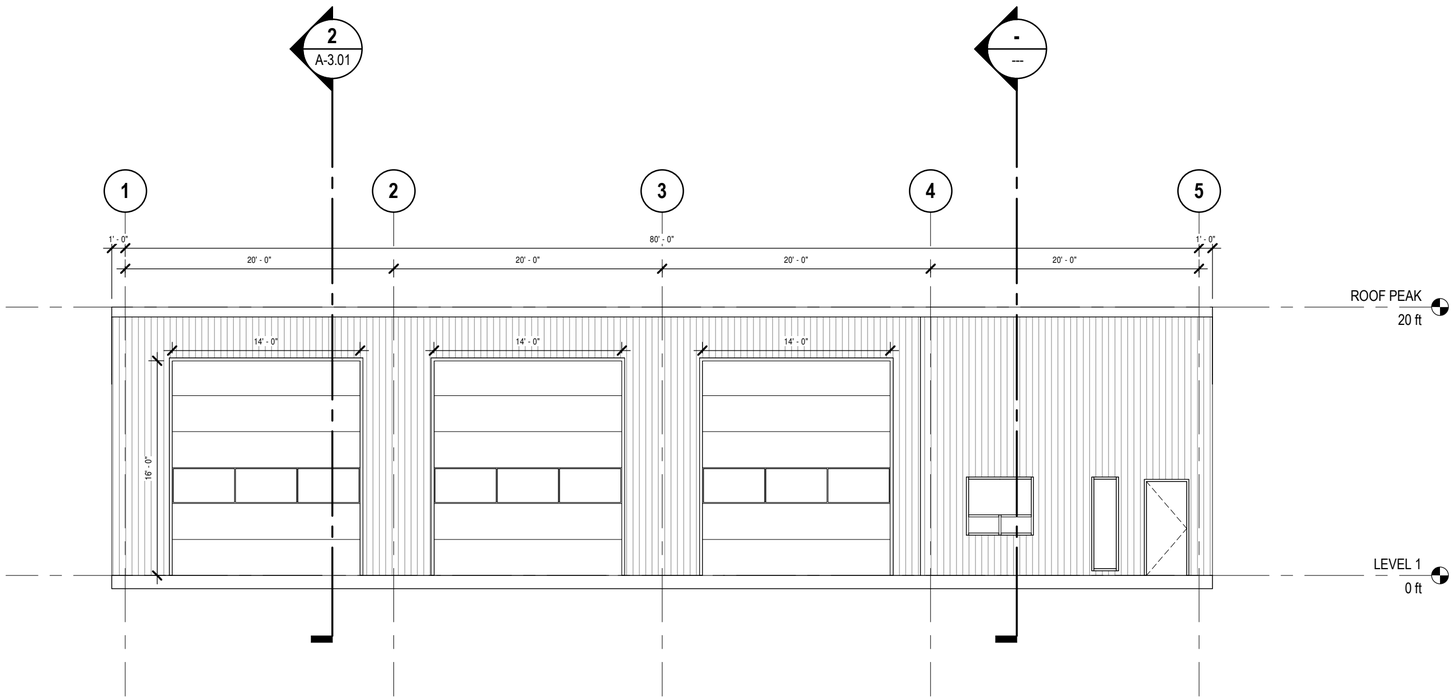

2 SK-1.00 Elevation_SOUTH
SCALE: 1/8" = 1'-0"

kasian

Kasian Architecture Interior Design and Planning Ltd

1500 West Georgia Street, Suite 1685
Vancouver, BC Canada V6G 2Z6
T 604 683 4145 F 604 683 2827
www.kasian.com

REV.	YY-MM-DD	REVISION / DRAWING ISSUE	REVIEW

CONSULTANT

PERMIT STAMP

SEAL

THIS DRAWING, AS AN INSTRUMENT OF SERVICE, IS THE PROPERTY OF KASIAN ARCHITECTURE INTERIOR DESIGN AND PLANNING LTD, THE COPYRIGHT IN THE SAME BEING RESERVED TO THEM. NO REPRODUCTION IS ALLOWED WITHOUT THE PERMISSION OF KASIAN ARCHITECTURE INTERIOR DESIGN AND PLANNING LTD AND WHEN MADE MUST BEAR ITS NAME.
THIS DRAWING IS NOT TO BE SCALED. THE CONTRACTOR IS TO VERIFY DIMENSIONS AND DATA NOTED HEREIN WITH THE CONDITIONS ON SITE AND IS RESPONSIBLE FOR REPORTING ANY DISCREPANCY TO KASIAN ARCHITECTURE INTERIOR DESIGN AND PLANNING LTD FOR ADJUSTMENT.

PROJECT

Red Bluff Fire Hall

611 Fir Street, Quesnel, B.C

DRAWING TITLE

EXTERIOR ELEVATIONS

DRAWING ISSUE

PROJECT NO.	PLOT DATE	DRAWN
270161	2025/06/06	Author
	SCALE 1/8" = 1'-0"	REVIEWED Checker

DRAWING NO. A-2.01

REVISION

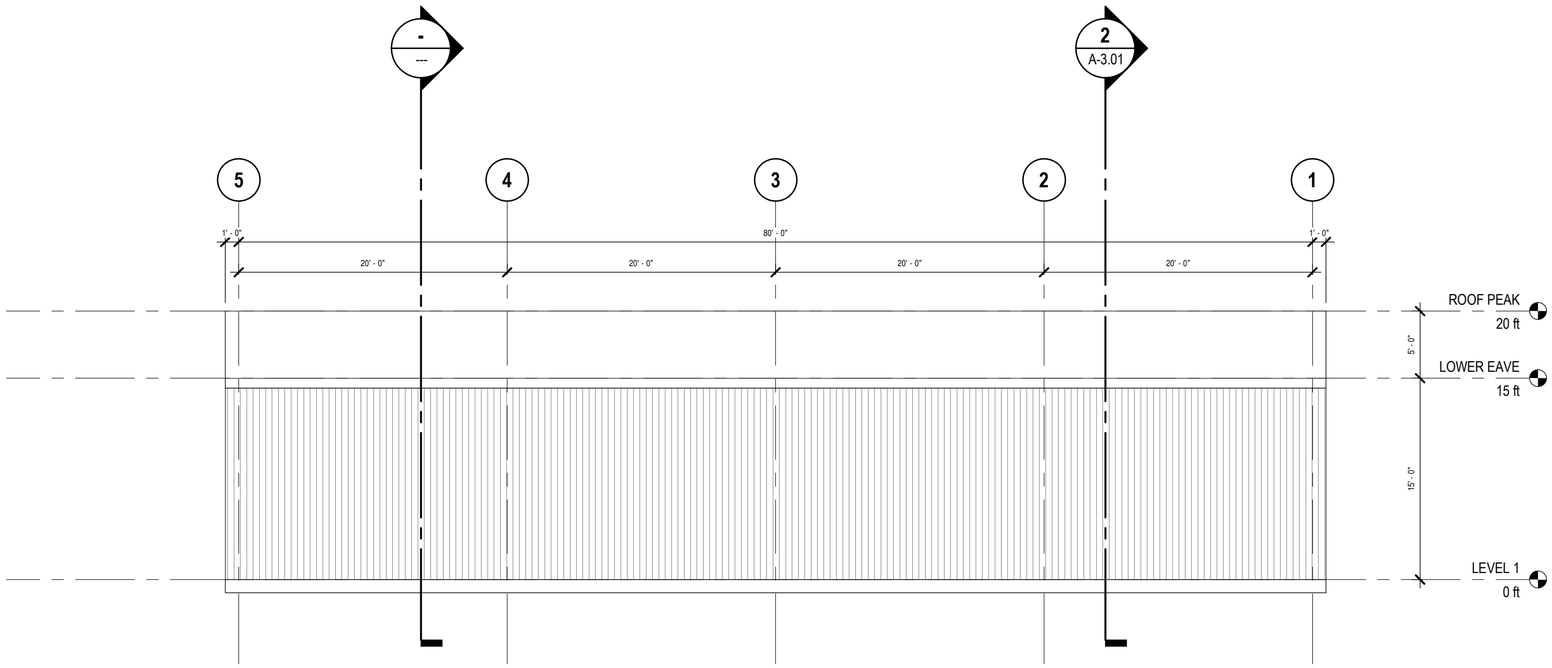

1 SK-1.00 Elevation_NORTH
SCALE: 1/8" = 1'-0"

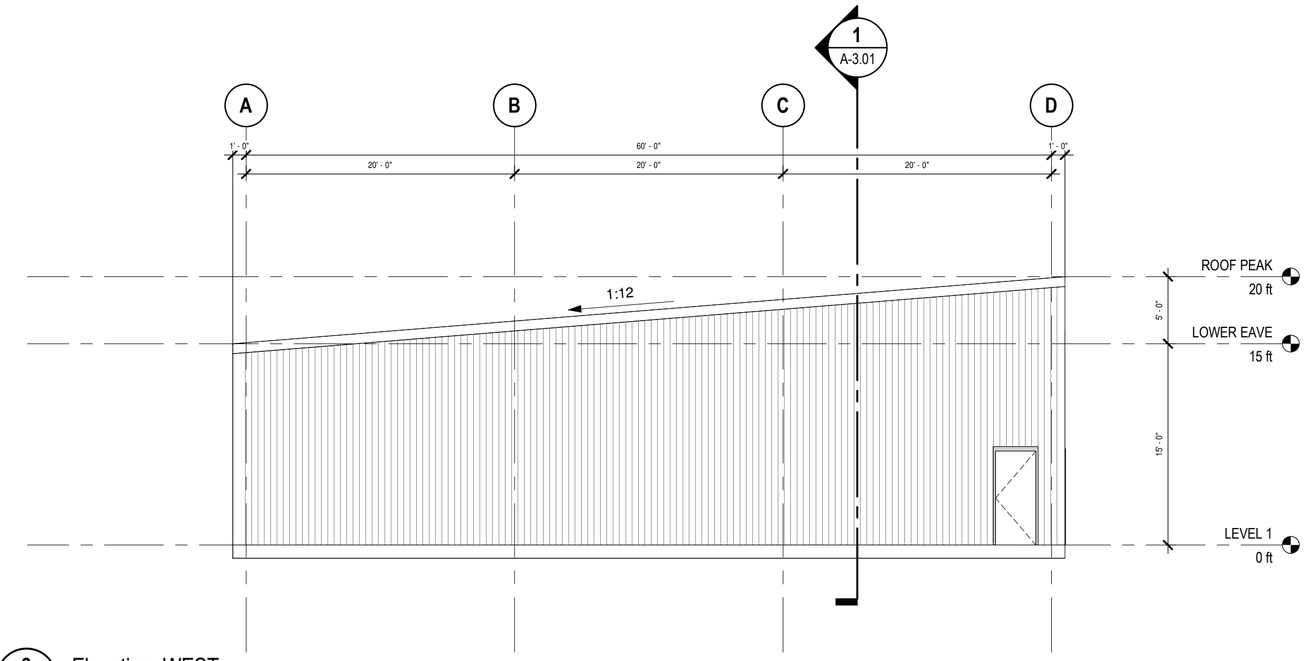

2 SK-1.00 Elevation_WEST
SCALE: 1/8" = 1'-0"

kasian

Kasian Architecture Interior Design and Planning Ltd

1500 West Georgia Street, Suite 1685
Vancouver, BC Canada V6G 2Z6
T 604 683 4145 F 604 683 2827
www.kasian.com

REV.	YY-MM-DD	REVISION / DRAWING ISSUE	REVIEW

CONSULTANT

PERMIT STAMP

SEAL

THIS DRAWING, AS AN INSTRUMENT OF SERVICE, IS THE PROPERTY OF KASIAN ARCHITECTURE INTERIOR DESIGN AND PLANNING LTD, THE COPYRIGHT IN THE SAME BEING RESERVED TO THEM. NO REPRODUCTION IS ALLOWED WITHOUT THE PERMISSION OF KASIAN ARCHITECTURE INTERIOR DESIGN AND PLANNING LTD AND WHEN MADE MUST BEAR ITS NAME.

THIS DRAWING IS NOT TO BE SCALED. THE CONTRACTOR IS TO VERIFY DIMENSIONS AND DATA NOTED HEREIN WITH THE CONDITIONS ON SITE AND IS RESPONSIBLE FOR REPORTING ANY DISCREPANCY TO KASIAN ARCHITECTURE INTERIOR DESIGN AND PLANNING LTD FOR ADJUSTMENT.

PROJECT

Red Bluff Fire Hall

611 Fir Street, Quesnel, B.C

DRAWING TITLE

EXTERIOR ELEVATIONS

DRAWING ISSUE

PROJECT NO.	PLOT DATE	DRAWN
270161	2025/06/06	Author
	SCALE 1/8" = 1'-0"	REVIEWED Checker

DRAWING NO. A-2.02

REVISION

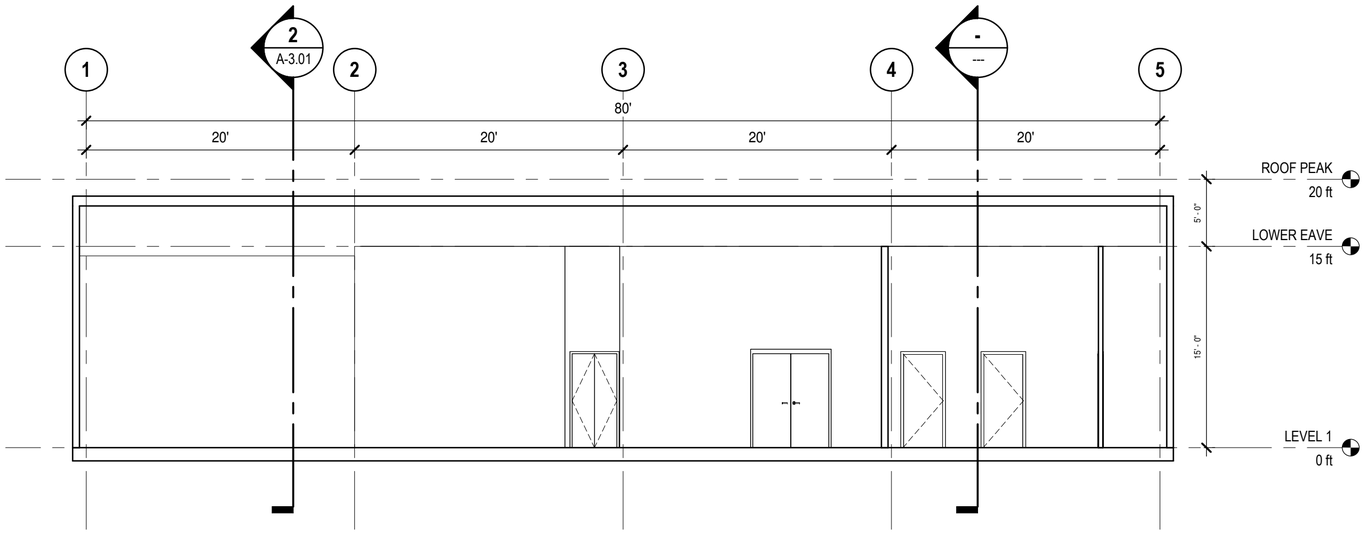

1 A-0.11 Section 1
SCALE: 1/8" = 1'-0"

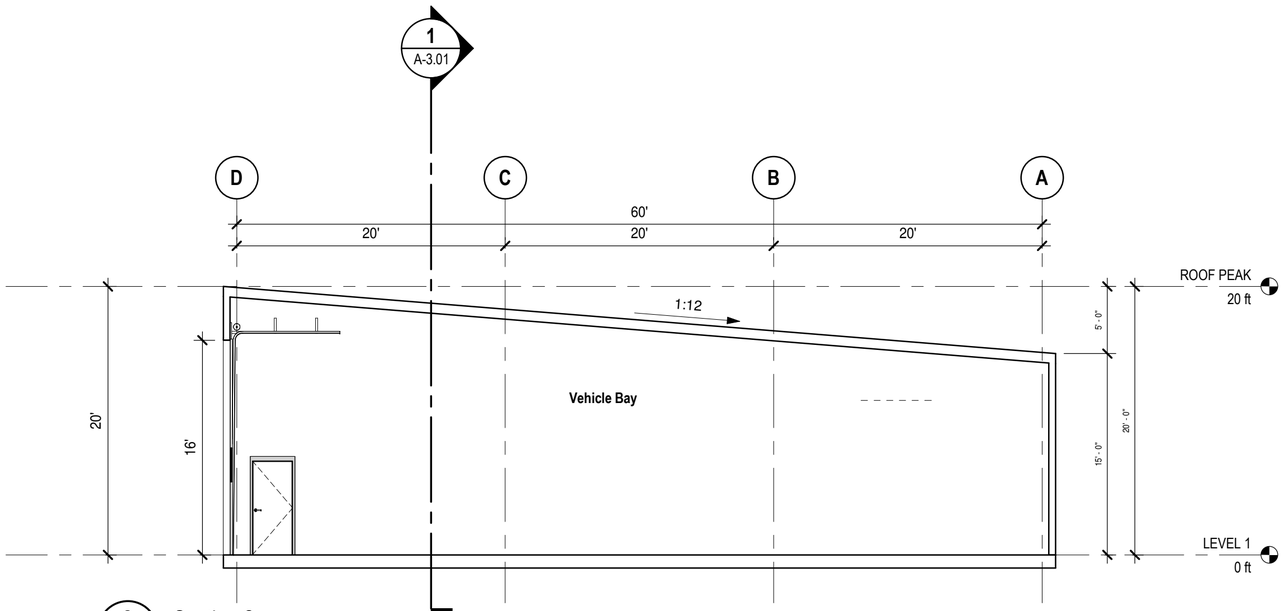

2 A-0.11 Section 2
SCALE: 1/8" = 1'-0"

Kasian Architecture
Interior Design
and Planning Ltd

1500 West Georgia Street, Suite 1685
Vancouver, BC Canada V6G 2Z6
T 604 683 4145 F 604 683 2827
www.kasian.com

REV.	YY-MM-DD	REVISION / DRAWING ISSUE	REVIEW

CONSULTANT

PERMIT STAMP

SEAL

THIS DRAWING, AS AN INSTRUMENT OF SERVICE, IS THE PROPERTY OF KASIAN ARCHITECTURE INTERIOR DESIGN AND PLANNING LTD, THE COPYRIGHT IN THE SAME BEING RESERVED TO THEM. NO REPRODUCTION IS ALLOWED WITHOUT THE PERMISSION OF KASIAN ARCHITECTURE INTERIOR DESIGN AND PLANNING LTD AND WHEN MADE MUST BEAR ITS NAME.
THIS DRAWING IS NOT TO BE SCALED. THE CONTRACTOR IS TO VERIFY DIMENSIONS AND DATA NOTED HEREIN WITH THE CONDITIONS ON SITE AND IS RESPONSIBLE FOR REPORTING ANY DISCREPANCY TO KASIAN ARCHITECTURE INTERIOR DESIGN AND PLANNING LTD FOR ADJUSTMENT.

PROJECT

Red Bluff Fire Hall

611 Fir Street, Quesnel, B.C

DRAWING TITLE

BUILDING SECTIONS

DRAWING ISSUE

PROJECT NO.	PLOT DATE	DRAWN
270161	2025/06/06	Author
	SCALE 1/8" = 1'-0"	REVIEWED Checker

DRAWING NO. A-3.01

REVISION